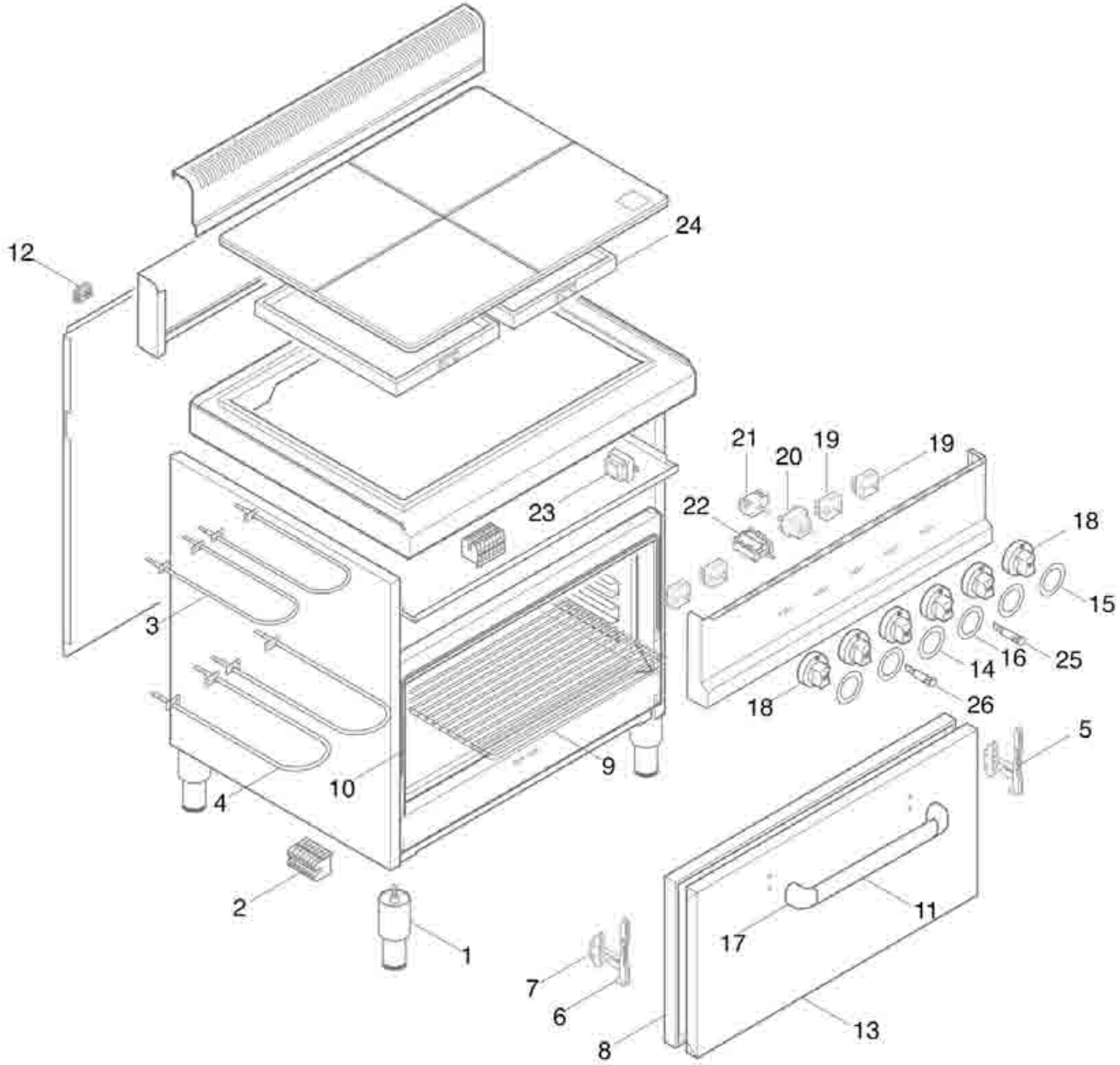
12
24
21
20
19
19
23
22
18
15
3
16
25
14
18
26
5
9
10
4
2
11
1
17
7
6
13
8

E7TP+FE

Pos. Item	Codice Code	Descrizione	Item Description	Designation articles	Artikelbeschreibung	Decripciòn artìculos	N° pezzi - No. pieces					
1	24684200	Piedino inox 1 1/2 h-125/175	Foot 1 1/2 h-125/175	Pied 1 1/2 h-125/175	Fuss 1 1/2 h-125/175	Pata 1 1/2 h-125/175						4
2	25185100	Kit morsettiera 10 mmq	Terminal board 10 mmq	Bornier 10 mmq	Klemmenleiste 10 mmq	Bornera 10 mmq						2
3	31320000	Resistenza superiore 990w 24ov	990w 24ov higher heating elem	RÉsistance superieur 990w 24ov	Oberer widerstand 990w 24ov	Resistencia superior 990w 24ov						3
4	31320400	Resistenza inferiore 1500w 240	1500w 240v lower heating eleme	RÉsistance infÉrieure 1500w 24	Unteres widerstand 1500w 240v	Resistencia inferior 1500w 240						3
5	31802000	Cerniera dx forno cucine	Right oven hinge	Charniere droite four	Rechtsseitiges scharnier	Bisagra derecha horno						1
6	31802100	Cerniera sx forno cucine	left oven hinge	Charniere gauche four	Linksseitiges scharnier	Bisagra izda. horno						1
7	31802500	Portarullino cerniera forno	Roller-bearing oven hinge	Porte-rouleau charniere four	Rollenhalter scharniere fuer b	Soporte rodillo bisagra horno						2
8	31803700	Controporta fg/fe 2/1gn s.7/90	Controporta fg/fe 2/1gn s.7/90	Controporta fg/fe 2/1gn s.7/90	Controporta fg/fe 2/1gn s.7/90	Controporta fg/fe 2/1gn s.7/90						1
9	31856800	Grc 2/1 gn - griglia forno cuc	Grc 2/1 gn-cooker oven grill	Grc 2/1 gn-grille four	Grc 2/1 gn- backofen-rost s.70	Grc 2/1 gn-parrilla horno						1
10	31858600	Guarn.fibra vetro fg/fe l=1315	Seal for oven 2/1gn l=1315	Joint pour four 2/1gn l=1315	Meter-turdichtung ofen 2/1gn l	Junta por horno 2/1gn l=1315						1
11	31874000	Maniglia sez.ovale aisi 304 42	Handle aisi 304 425 x 41	Poignee aisi 304 425 x 41	Griffe aisi 304 425 x 41	Asa aisi 304 425 x 41						1
12	31885800	Morsetto equipotenziale	Equip.terminal	Borne Équip.	Aquipotenzial-klemmenleiste	Borne equipotencial						1
13	31915200	Ass. porta est.fe/fg 2/1gn s.7	Ass. porta est.fe/fg 2/1gn s.7	Ass. porta est.fe/fg 2/1gn s.7	Ass. porta est.fe/fg 2/1gn s.7	Ass. porta est.fe/fg 2/1gn s.7						1
14	31952600	Serig.rossa manop.forno el.mul	Electric knob serigraphy	Serigraphie manette electr.	Drehknopfserigraphie	Serigrafia mando electr.						1
15	31952800	Serig.rossa manop.cuc.ele.vtr	Electric knob serigraphy	Serigraphie manette electr.	Drehknopfserigraphie	Serigrafia mando electr.						4
16	31953500	Serig.rossa manop.frytop/forno	Knob serigraphy	Serigraphie manette	Drehknopfserigraphie	Serigrafia mando						1
17	31979000	Terminale crom.lucido plastica	Chromium-plated terminal	Terminal chromÉ poli	Verchromte grifendverschluss	Terminal cromado lustroso						2
18	35877200	Manopola rossa p. 6x4.6 a o° r	Red knob p. 6x4.6 a o° ral3000	Manette rouge p. 6x4.6 a o° r	Drehknopf p. 6x4.6 a o° ral300	Mando rojo p. 6x4.6 a o° ral30						6
19	31290600	Termostato 400° per e7tp	Termostato 400° per e7tp	Termostato 400° per e7tp	Termostato 400° per e7tp	Termostato 400° per e7tp						4
20	30064900	Termostato trif.270Ø x fe 2/1	Thermostat 270Ø - fe 2/1	Thermostat 270Ø - fe 2/1	Thermostat 270Ø - fe 2/1	Termostato 270Ø - fe 2/1						1
21	22050300	Interr. quadrip. fry-top/700;	Switch	Interrupteur	Schalter	Interruptor						1
22	22049800	Commutatore per fe 2/1-cpe40/e	Selector - cpe40/e9cp40	Commutateur - cpe40/e9cp40	Umschalter - cpe40/e9cp40	Conmutador - cpe40/e9cp40						1
23	22069700	Termostato trif.sicur.fry-top	Security thermostat	Thermostat de surete	Sicherheitthermostat	Termostato de seguridad						1
24	31928000	Resistenza per e7tp 2250w - 38	Resistenza per e7tp 2250w - 38	Resistenza per e7tp 2250w - 38	Resistenza per e7tp 2250w - 38	Resistenza per e7tp 2250w - 38						4
25	30168500	Spia arancio 230v d.10mmt150Ø	Orange lamp 230v	Temoin lumineux orange 230v	Orange kontrollampe 230v	Piloto naranja 230v						1
26	30168800	Spia verde 230v d.10mmt150Ø	Green lamp 230v	Temoin lumineux vert 230v	Grune kontrollampe 230v	Piloto verde 230v						1